New Exact Solution and Novel Time Solitons for the Dissipative Zabolotskaya–Khokhlov Equation from Nonlinear Acoustics

Bang-Qing Li[a,c], Su Li[a], and Yu-Lan Ma[b]

[a] School of Computer and Information Engineering, Beijing Technology and Business University, Beijing 100048, China
[b] School of Science, Beijing Technology and Business University, Beijing 100048, China
[c] School of Mechanical Electronic and Information Engineering, China University of Mining and Technology, Beijing 100083, China

Reprint requests to B.-Q. L.; Tel: +086–10–13126896428, Fax: +86–10–81353202,
E-mail: libq@th.btbu.edu.cn

Z. Naturforsch. **67a,** 601 – 607 (2012) / DOI: 10.5560/ZNA.2011-0063
Received February 21, 2012 / revised June 11, 2012 / published online August 20, 2012

Under investigation in this paper is the dissipative Zabolotskaya–Khokhlov equation from nonlinear acoustics. Through extending a symbolic computation algorithm, namely, the (G'/G)-expansion method, a new type of exact solution with variable separation is constructed for the equation. The solution is more general because two arbitrary functions are involved with regard to the time variable. Some novel time solitons are observed by appropriately choosing the arbitrary functions at special cases.

Key words: Dissipative Zabolotskaya–Khokhlov Equation; Symbolic Computation Algorithm; Generalized Travelling Wave Solution; Exact Solution; Time Soliton.
PACS numbers: 02.30.Jr; 05.45.Yv; 03.65.Ge

1. Introduction

The dissipative Zabolotskaya–Khokhlov equation (DZKE) reads as

$$(u_t + uu_x - u_{xx})_x + u_{yy} = 0\,. \tag{1}$$

It can be traced back to the $(3+1)$-dimensional Zaboloskaya and Khokhlov equation (ZKE),

$$(u_t + uu_x)_x + u_{yy} + u_{zz} = 0\,, \tag{2}$$

which was proposed in [1] to model sound beam propagation governing diffraction and nonlinear effects in a slightly nonlinear medium without dispersion or absorption. It enables one to study the beam deformation associated with the nonlinear properties of the medium. In [2], Kuznetsov took into account the thermoviscous term of adsorption and derived a equation known as Khokhlov–Zabolotskaya–Kuznetsov equation (KZKE):

$$(u_t + uu_x)_x - vu_{xxx} + u_{yy} + u_{zz} = 0\,, \tag{3}$$

which has been derived in some physic models (see e.g. [3, 4]). The KZKE (3) is also known as dissipative ZK equation.

A more general version of the ZKE (2) was derived by Taniuti in [5]. He demonstrated that a multidimensional system of nonlinear evolution equations can be reduced to the Kadomtsev–Petviashvili equation and to the Zabolostskaya–Khokhlov equation with a dissipative term in the weakly dispersive and weakly dissipative cases, respectively, by means of an extension of the reductive perturbation method to quasi-one-dimensional propagation.

Finding the exact solution of the equations (1) – (3) is a significant, but very difficult task. Vinogradov and Vorob'ev applied symmetries in looking for an exact solution of the ZKE (2) in [6]. Chowdhury and Nasker obtained some Lie point symmetries and the conservation laws of the ZKE (2) in $(2+1)$-dimensions in [7]. The infinitesimal symmetries and exact solutions of the ZKE (2) and the KZKE (3) have been investigated in [3, 8].

Tajiri discussed a similarity reduction of the ZKE. (2) with a dissipative term by Lie's method in [9]. In that paper, the ZKE (2) is reduced to a one-dimensional differential equation of the Burgers equation. Some exact solutions were obtained by substituting the solutions of the Burgers equation into the similarity transformations.

Recently, Bruzon et al. obtained some travelling wave solutions of the DZKE (1) by using the theory of nonclassical symmetry reductions (see [10]).

We think that finding more types of exact solutions of the equations (1) – (3) is still of fundamental interest.

Wang et al. proposed a new method, namely, the (G'/G)-expansion method, to find travelling wave solutions for nonlinear evolution equations (NEEs) [11 – 13]. The method is based on the homogeneous balance principle and linear ordinary differential equation (LODE) theory. It is assumed that the travelling wave solutions can be expressed by a polynomial in (G'/G), and that $G = G(\xi)$ satisfies a second-order LODE, where ξ is a linear travelling wave transform of the independent variables. The degree of the polynomial can be determined by the homogeneous balance between the highest-order derivative and nonlinear terms appearing in the given NEE. The coefficients of the polynomial can be obtained by solving a set of algebraic equations.

The (G'/G)-expansion method is a powerful tool to look for the exact solutions for NEEs. It has been applied to many NEEs later [14 – 18]. Very recently, we have extended the (G'/G)-expansion method to construct the generalized travelling wave solutions for some NEEs [19 – 27]. The known travelling wave solutions are the special cases of the generalized travelling wave solution.

In this paper, we are motivated by exploring the new solutions of the DZKE (1) by the (G'/G)-expansion method. A type of generalized travelling wave solution is constructed in variable separation form for the DZKE (1). The solution includes two arbitrary functions of time variable. Some particular cases are discussed by setting properly these arbitrary functions.

The paper is arranged as follows. In Section 2, the (G'/G)-expansion method is extended. The generalized travelling wave solution is obtained for the DZKE (1) by this method in Section 3. Some particular solutions are investigated in Section 4 and conclusions are then given in the final Section 5.

2. A Brief Description of the (G'/G)-Expansion Method

For a given $(2+1)$-dimensional NEE with independent variables x, y, t and dependent variable u,

$$F(u, u_t, u_x, u_y, u_{tt}, u_{xt}, u_{yt}, u_{xy}, u_{xx}, u_{yy}, \ldots) = 0, \tag{4}$$

the fundamental idea of the (G'/G)-expansion method is that the solutions of (4) can be expressed by a polynomial in (G'/G) as [11, 12]

$$u = \sum_{i=0}^{n} a_i \left[\frac{G'(q)}{G(q)}\right]^i, \tag{5}$$

where $q = sx + ly - Vt$ is a linear travelling wave transformation, and s, l, V, a_i $(i = 0, 1, 2, \ldots, n)$ are constants to be determined later. $G(q)$ satisfies the second-order LODE as follows:

$$G'' + \lambda G' + \mu G = 0. \tag{6}$$

We extend $q = sx + ly - Vt$ into a nonlinear transformation $q = q(x, y, t)$, where q is an arbitrary function of the independent variables x, y, t. The solutions involving $q(x, y, t)$ are here called the generalized travelling wave solutions. The generalized travelling wave solutions allow us to select $q(x, y, t)$ and excite abundant soliton structures.

However it is extremely arduous to calculate the solutions with $q(x, y, t)$. In general, we may suppose that $q(x, y, t)$ is in variable separation form, such as $q(x, y, t) = f(x, t) + g(y)$ or $q(x, y, t) = f(x, t) + g(y, t)$.

3. The Generalized Travelling Wave Solution of the DZKE (1)

Supposing the solution of the DZKE (1) can be expressed as

$$u = \sum_{i=0}^{m} a_i \left[\frac{G'(q)}{G(q)}\right]^i, \tag{7}$$

where a_i $(i = 0, 1, 2, \ldots, n)$ are arbitrary functions of variables x, y, t to be determined, $G(q)$ satisfies the second-order LODE (6), and $q = q(x, y, t)$ is an arbitrary function of x, y, t.

Balancing the highest power of u_{xxx} and $(uu_x)_x$ in the DZKE (1), we easily get $m + 3 = (2m + 1) + 1 \Rightarrow m = 1$ (see [28]). Thus, (7) can be rewritten as follows:

$$u = a_0 + a_1 \left(\frac{G'}{G}\right), \quad a_1 \neq 0. \tag{8}$$

Hereafter we adopt the following notations: $a_{ix} = \frac{\partial a_i}{\partial x}$, $a_{it} = \frac{\partial a_i}{\partial t}$, $a_{ixx} = \frac{\partial^2 a_i}{\partial x^2}$, $a_{itx} = \frac{\partial^2 a_i}{\partial x \partial t}$, $q_x = \frac{\partial q}{\partial x}$, $q_{xx} = \frac{\partial^2 q}{\partial x^2}$, and so on. From (8) and (6), we calculate u_{yy},

u_{tx}, $(uu_x)_x$, and u_{xxx}, then submit them into (1). Collecting the term of (G'/G) with the same power, then letting each coefficient to zero, we can derive a set of over-determined partial differential equations for a_0, a_1:

$$\left(\frac{G'}{G}\right)^4 : \; 3a_1^2q_x^2 + 6a_1q_x^3 = 0\,, \tag{9}$$

$$\begin{aligned}\left(\frac{G'}{G}\right)^3 :\; & 2a_1q_tq_x + \{-(a_1^2q_x)_x \\ & - 2q_x[a_1(a_{1x} - \lambda a_1q_x) - a_0a_1q_x] + 3\lambda a_1^2q_x^2\} \\ & - \{2(a_1q_x^2)_x - 2q_x[-(a_1q_x)_x - q_x(a_{1x} - \lambda a_1q_x) \\ & + 2\lambda a_1q_x^2] - 6\lambda a_1q_x^3\} + 2a_1q_y^2 = 0\,,\end{aligned} \tag{10}$$

$$\begin{aligned}\left(\frac{G'}{G}\right)^2 :\; & \{-(a_1q_t)_x - q_x(a_{1t} - \lambda a_1q_t) + 2\lambda a_1q_tq_x\} \\ & + \{-(a_1q_y)_y - q_y(a_{1y} - \lambda a_1q_y) + 2\lambda a_1q_y^2\} \\ & + [a_1(a_{1x} - \lambda a_1q_x) - a_0a_1q_x]_x - q_x[a_0(a_{1x} - \lambda a_1q_x) \\ & + a_1(a_{0x} - \mu a_1q_x)] - 2\lambda q_x[a_1(a_{1x} - \lambda a_1q_x) - a_0a_1q_x] \\ & + 3\mu a_1^2q_x^2 - [-(a_1q_x)_x - q_x(a_{1x} - \lambda a_1q_x) + 2\lambda a_1q_x^2]_x \\ & + 2\lambda q_x[-(a_1q_x)_x - q_x(a_{1x} - \lambda a_1q_x) + 2\lambda a_1q_x^2] \\ & + q_x[(a_{1x} - \lambda a_1q_x)_x - \lambda q_x(a_{1x} - \lambda a_1q_x) + 2\mu a_1q_x^2] \\ & + 6\mu a_1q_x^3 = 0\,,\end{aligned} \tag{11}$$

$$\begin{aligned}\left(\frac{G'}{G}\right) :\; & (a_{1t} - \lambda a_1q_t)_x - \lambda q_x(a_{1t} - \lambda a_1q_t) \\ & + 2\mu a_1q_xq_t + (a_{1y} - \lambda a_1q_y)_y - \lambda q_y(a_{1y} - \lambda a_1q_y) \\ & + 2\mu a_1q_y^2 + [a_0(a_{1x} - \lambda a_1q_x) + a_1(a_{0x} - \mu a_1q_x)]_x \\ & - \lambda q_x[a_0(a_{1x} - \lambda a_1q_x) + a_1(a_{0x} - \mu a_1q_x)] \\ & - 2\mu q_x[a_1(a_{1x} - \lambda a_1q_x) - a_0a_1q_x] - [(a_{1x} - \lambda a_1q_x)_x \\ & - \lambda q_x(a_{1x} - \lambda a_1q_x) + 2\mu a_1q_x^2]_x + \lambda q_x[(a_{1x} - \lambda a_1q_x)_x \\ & - \lambda q_x(a_{1x} - \lambda a_1q_x) + 2\mu a_1q_x^2] + 2\mu q_x[-(a_1q_x)_x \\ & - q_x(a_{1x} - \lambda a_1q_x) + 2\lambda a_1q_x^2] = 0\,,\end{aligned} \tag{12}$$

$$\begin{aligned}\left(\frac{G'}{G}\right)^0 :\; & (a_{0t} - \mu a_1q_t)_x - \mu q_x(a_{1t} - \lambda a_1q_t) \\ & + (a_{0y} - \mu a_1q_y)_y - \mu q_y(a_{1y} - \lambda a_1q_y) \\ & + [a_0(a_{0x} - \mu a_1q_x)]_x - \mu q_x[a_0(a_{1x} - \lambda a_1q_x) \\ & + a_1(a_{0x} - \mu a_1q_x)] - (a_{0x} - \mu a_1q_x)_{xx} \\ & + \mu[q_x(a_{1x} - \lambda a_1q_x)]_x + \mu q_x[(a_{1x} - \lambda a_1q_x)_x \\ & - \lambda q_x(a_{1x} - \lambda a_1q_x) + 2\mu a_1q_x^2] = 0\,.\end{aligned} \tag{13}$$

In this paper, we attempt to seek the solution for DZKE (1) with variable separation as

$$q(x,y,t) = f(x) + g(y,t)\,, \tag{14}$$

where $f(x)$ and $g(y,t)$ are the functions of the indicated variables to be determined later. After computation, we only get

$$q_{xx} = q_{yy} = 0\,. \tag{15}$$

We set

$$f(x) = kx\,,\;\; g(y,t) = h(t)y + r(t)\,, \tag{16}$$

where k is constant and $k \neq 0$, $h(t)$ and $r(t)$ have the derivatives of t. Thus we acquire a set of a_0, a_1, q as follows:

$$\begin{aligned} a_0 &= \frac{-h'(t)y + r'(t) - \lambda k^2}{k} - \frac{h^2(t)}{k^2}\,, \\ a_1 &= -2k\,, \\ q(x,y,t) &= kx + h(t)y + r(t)\,. \end{aligned} \tag{17}$$

Substituting the general solution of (6) into (8), the solution of the DZKE (1) can be obtained in the following generalized travelling wave solution.

When $\lambda^2 - 4\mu > 0$, noting $\delta_1 = \frac{\sqrt{\lambda^2-4\mu}}{2}$, we have the generalized travelling wave solution for the DZKE (1) in terms of hyperbolic functions:

$$\begin{aligned} u(x,y,t) = & -\frac{kh'(t)y + [h^2(t) + kr'(t)]}{k^2} \\ & - 2k\delta_1 B\,, \end{aligned} \tag{18}$$

where $q(x,y,t) = kx + h(t)y + r(t)$ and

$$B = \frac{C_1 \sinh \delta_1 q(x,y,t) + C_2 \cosh \delta_1 q(x,y,t)}{C_1 \cosh \delta_1((x,y,t) + C_2 \sinh \delta_1 q(x,y,t)}\,. \tag{19}$$

It is obvious that the solution (18) can degenerate the travelling wave solution when $h(t)$ and $r(t)$ are taken as arbitrary constants.

4. Some Novel Time Soliton Solutions for the DZKE (1)

Thanks to the arbitrary functions $h(t)$ and $r(t)$ in solution (18), it is convenient to investigate abundant particular solutions by setting $h(t)$ and $r(t)$ at special functions. We take solution (18) to discuss some special solutions in terms of variables y, t, and u.

Example 1. Setting $h(t)$ and $r(t)$ in solution (18) as follows:

$$\begin{aligned} h(t) &= 1\,, \\ r(t) &= \operatorname{sech}(t) + \tanh(t) + \sin(t)\,, \end{aligned} \tag{20}$$

then fixing variable x and parameters C_1, C_2, δ_1 as

$$x = 0\,,\ \ C_1 = 3\,,\ \ C_2 = 2\,,\ \ \delta_1 = 1\,. \tag{21}$$

Figure 1 illustrates the plots by setting $k = 2$ and 10, respectively.

Example 2. We take $h(t)$ and $r(t)$ in solution (18) as

$$h(t) = k_1 t\,,\ \ r(t) = t^2 + k_2\,, \tag{22}$$

fix variable x and parameters $C_1, C_2, \delta_1, k_1, k_2$ as

$$\begin{aligned} &x = 1\,,\ \ C_1 = 3\,,\ \ C_2 = 2\,, \\ &\delta_1 = 1\,,\ \ k_1 = 10\,,\ \ k_2 = 1\,. \end{aligned} \tag{23}$$

Figure 2 exhibits the plots by setting $k_2 = -11$ and 6, respectively.

Example 3. Setting $h(t)$ and $r(t)$ in solution (18) as

$$\begin{aligned} h(t) &= \exp(-t^2) + \cos(t)\,, \\ r(t) &= \exp(-t^2) + \cos(t)\,, \end{aligned} \tag{24}$$

then fixing variable x and parameters C_1, C_2, δ_1 as

$$x = 1\,,\ \ C_1 = 3\,,\ \ C_2 = 2\,,\ \ \delta_1 = 1\,. \tag{25}$$

Figure 3 shows the plots by setting $k = 2$ and 10, respectively.

Example 4. When setting $h(t)$ and $r(t)$ in solution (18) as

$$h(t) = 1\,,\ \ r(t) = \tanh(t)\,, \tag{26}$$

$$\begin{aligned} h(t) = 1\,,\ \ r(t) &= \operatorname{sech}(t-10) \\ &\quad + \tanh(t) + \operatorname{sech}(t+10)\,, \end{aligned} \tag{27}$$

then taking variable x and parameters C_1, C_2, δ_1 also given by (25), we observe the plots in Figure 4.

Example 5. Loop-like structures can often be observed in nature, such as ocean waves and biological DNA structure. A loop-like solitary wave is an interesting nonlinear physical phenomena (see also [29 – 33]).

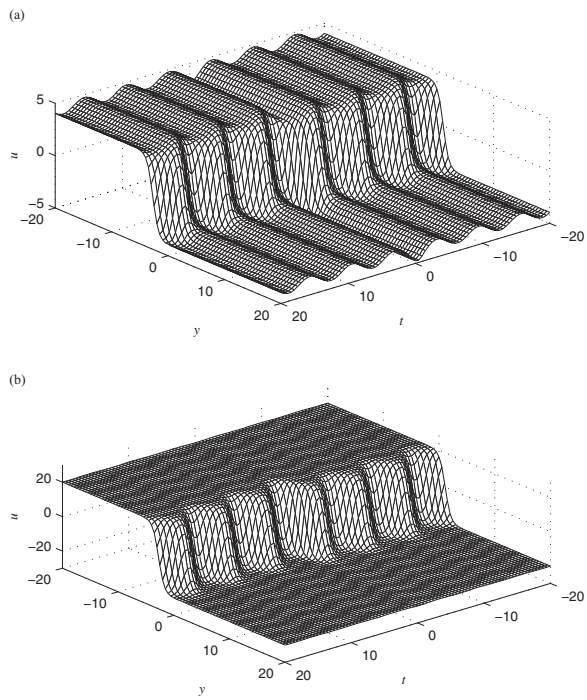

Fig. 1. Plots of $u(x,t)$ with $h(t)$ and $r(t)$ given by (20), x, C_1, C_2, δ_1 given by (21), and (a) $k = 2$, (b) $k = 10$.

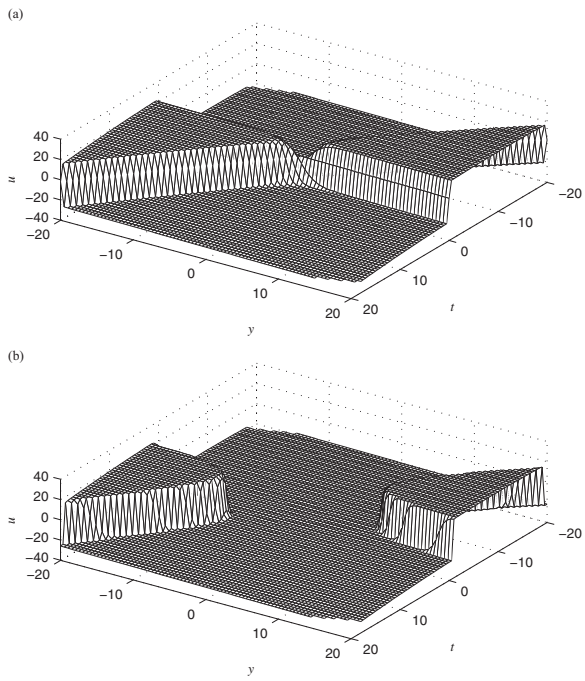

Fig. 2. Plots of $u(x,t)$ with $h(t)$ and $r(t)$ given by (22), $x, C_1, C_2, \delta_1, k, k_1$ given by (23), and (a) $k_2 = -11$, (b) $k_2 = 6$.

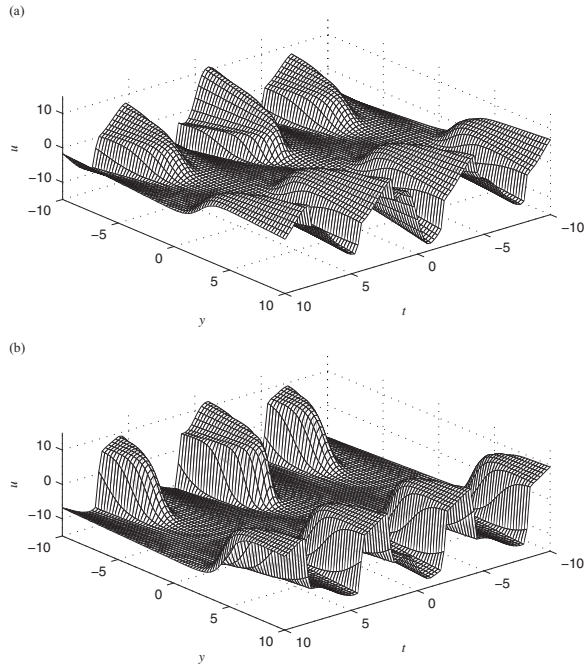

Fig. 3. Plots of $u(x,t)$ with $h(t)$ and $r(t)$ given by (24), x, C_1, C_2, δ_1 given by (25), and (a) $k = 2$, (b) $k = 10$.

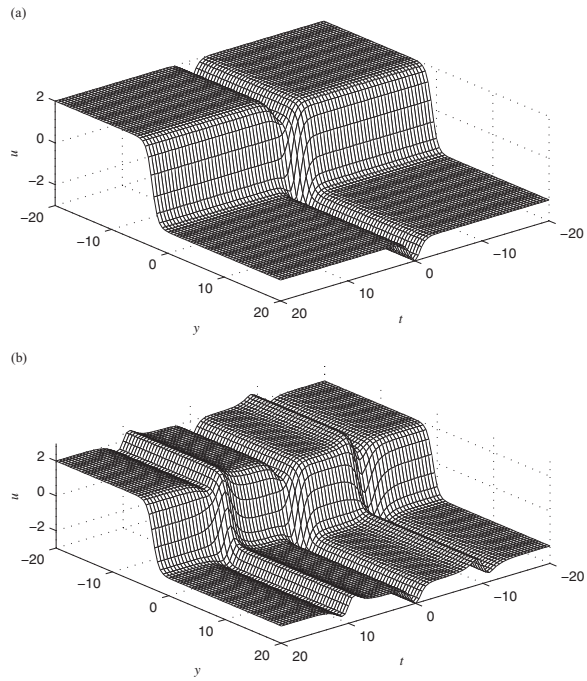

Fig. 4. Plots of $u(x,t)$ with the settings x, C_1, C_2, δ_1 given by (25), and $h(t), r(t)$ given by (a) (26), (b) (27).

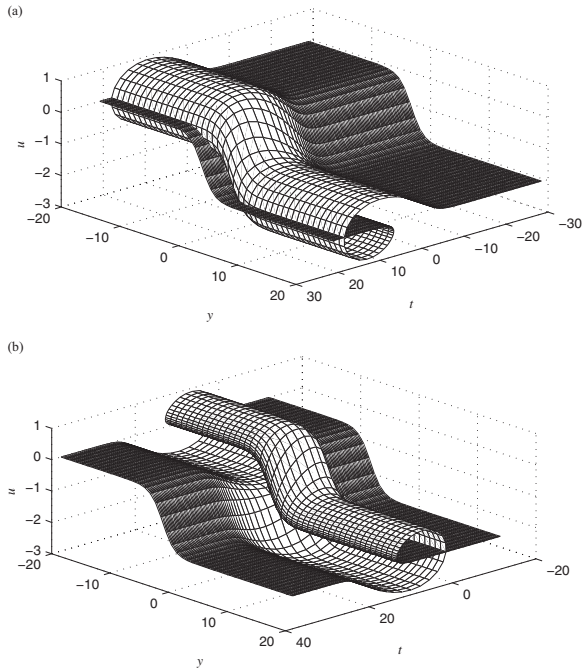

Fig. 5. Plots of $u(x,t)$ with $r(T), h(t)$, and $\bar{r}(T)$ given by (28), (29), and (30), and x, C_1, C_2, δ_1 given by (31), with (a) $k_2 = 1, k_3 = 18$; (b) $k_2 = 18, k_3 = 1$.

The structures are represented in mathematical multi-value functions. Now we explore the loop-like solution for the DZKE (1).

For solution (18), we introduce a new variable T defined by

$$r(T) = \int \bar{r}(T)\mathrm{d}T, \ t = \hat{r}(T), \tag{28}$$

where $\bar{r}$ and $\hat{r}$ are functions of T.

Setting $h(t)$, $\bar{r}$, and $\hat{r}$ as

$$h(t) = 1, \tag{29}$$

$$\bar{r}(T) = T\,\mathrm{sech}^2(k_1 T), \tag{30}$$

$$t = \hat{r}(T) = T + k_2 \tanh^2(T) + k_3 \mathrm{sech}^2(T),$$

then fixing variable x and parameters C_1, C_2, δ_1 as

$$x = 1, \ C_1 = 3, \ C_2 = 2, \ k_1 = 1, \ \delta_1 = 1, \tag{31}$$

a type of loop-like solutions is demonstrated in Figure 5 by setting k_2 and k_3 at different values, respectively.

5. Conclusions

Constructing new solutions and finding novel solitons are attractive in the research of nonlinear evolution systems [34 – 47].

In this paper, we established a type of new generalized travelling wave solutions in variable separation form for the DZKE (1) via extending the (G'/G)-expansion method. Moreover, some novel time solitons are investigated by taking properly the arbitrary functions involved in the solutions.

We believe that the discussions and results here could be interesting both for scientists investigating the corresponding model in acoustics and for specialists on methods to exact solutions of NEEs.

Acknowledgements

This work was supported by the Scientific Research Common Program of Beijing Municipal Commission of Education (No. KM201010011001). A part of this work was also supported by Funding Project for Innovation on Science, Technology and Graduate Education in Institutions of Higher Learning Under the Jurisdiction of Beijing Municipality (Nos. 201098, PXM2012_014213_000087,PXM2012_014213_000037, PXM2012_014213_000079).

[1] E. A. Zabolotskaya and R. R. Khokhlov, Sov. Phys. Acoust. **15**, 35 (1969).
[2] V. P. Kuznetsov, Sov. Phys. Acoust. **16**, 467 (1971).
[3] P. A. Clarkson and S. Hood, Eur. J. Appl. Math. **3**, 381 (1992).
[4] A. Rozanova, C. R. Acad. Sci., Ser. I: Math. **344**, 337 (2007).
[5] T. Taniuti, Wave Motion **12**, 373 (1990).
[6] A. M. Vinogradov and E. M. Vorob'ev, Sov. Phys. Accoust. **22**, 12 (1976).
[7] A. R. Chowdhury and M. Nasker, J. Phys. A **19**, 1775 (1986).
[8] W. Fushchych, W. Shtelen, and N. Serov, Symmetry Analysis and Exact Solutions of Equations of Nonlinear Mathematical Physics, Kluwer Academic, Dordrecht, 1993.
[9] M. Tajiri, J. Nonlin. Math. Phys. **2**, 392 (1995).
[10] M. S. Bruzon, M. L. Gandarias, M. Torrisi, and R. Tracina, J. Math. Phys. **50**, 103504 (2009).
[11] M. L. Wang, X. Z. Li, and J. L. Zhang, Phys. Lett. A **372**, 417 (2008).
[12] M. L. Wang, J. L. Zhang, and X. Z. Li, Appl. Math. Comput. **206**, 321 (2008).
[13] L. X. Li and M. L. Wang, Appl. Math. Comput. **208**, 440 (2009).
[14] A. Bekir, Phys. Lett. A **372**, 3400 (2008).
[15] E. M. E. Zayed and K. A. Gepreel, J. Math. Phys. **50**, 013502 (2009).
[16] İ. Aslan and T. Özisb, Appl. Math. Comput. **211**, 531 (2009).
[17] E. M. E. Zayed and M. A. M. Abdelaziz, Z. Naturforsch. **65a**, 1065 (2010).
[18] B. Q. Li and Y. L. Ma, Acta Phys. Sin. **58**, 4373 (2009).
[19] S. Zhang, J. L. Tong, and W. Wang, Phys. Lett. A **372**, 2254 (2008).
[20] S. Zhang, J. M. Ba, and Y. N. Sun, Z. Naturforsch. **64a**, 691 (2009).
[21] S. Zhang, Y. N. Sun, and J. M. Ba, Z. Naturforsch. **65a**, 33 (2011).
[22] Y. L. Ma, B. Q. Li, and J. Z. Sun, Acta Phys. Sin. **58**, 7402 (2009).
[23] B. Q. Li, Y. L. Ma, and M. P. Xu, Acta Phys. Sin. **59**, 1409 (2010).
[24] B. Q. Li and Y. L. Ma, Commun. Nonlin. Sci. Numer. Simul. **16**, 144 (2011).
[25] Y. L. Ma and B. Q. Li, Appl. Math. Comput. **31**, 2137 (2010).
[26] Y. L. Ma and B. Q. Li, J. Math. Phys. **51**, 063512 (2010).
[27] B. Q. Li and Y. L. Ma, Z. Naturforsch. **65a**, 518 (2010).
[28] M. L. Wang, Y. B. Zhou, and Z. B. Li, Phys. Lett. A **216**, 67 (1996).
[29] V. O. Vakhnenko, J. Math. Phys. **40**, 2011 (1999).
[30] V. O. Vakhnenko, E. J. Parkes, and A. V. Michtchenko, Int. J. Diff. Eq. Appl. **1**, 429 (1998).
[31] A. J. Morrison and E. J. Parkes, Chaos Solitons Fract. **16**, 13 (2003).
[32] B. Q. Li, Y. L. Ma, and J. Z. Sun, Appl. Math. Comput. **216**, 3522 (2010).
[33] Y. L. Ma and B. Q. Li, Appl. Math. Comput. **216**, 2137 (2010).
[34] B. Q. Li, Y. L. Ma, C. Wang, M. P. Xu, and Y. Li, Acta Phys. Sin. **60**, 060203 (2011).
[35] C. L. Zheng and H. P. Zhu, Z. Naturforsch. **66a**, 383 (2011).
[36] J. X. Fei, C. L. Zheng, and H. P. Zhu, Z. Naturforsch. **66a**, 1 (2011).
[37] J. H. Lu and C. L. Zheng, Z. Naturforsch. **65a**, 301 (2010).
[38] C. L. Zheng and J. F. Ye, Int. J. Mod. Phys. B **23**, 3729 (2009).
[39] C. L. Zheng, J. Y. Qiang, and S. H. Wang, Commun. Theor. Phys. **54**, 1054 (2010).

[40] J. Y. Qiang, S. H. Ma, and Q. B. Ren, Z. Naturforsch. **65a**, 1154 (2010).
[41] L. C. Lue, S. H. Ma, and J. P. Fang, Z. Naturforsch. **65a**, 477 (2010).
[42] S. H. Ma, J. P. Fang, and B. H. Hong, Z. Naturforsch. **64a**, 795 (2009).
[43] S. H. Ma, Y. P. Lu, and J. P. Fang, Z. Naturforsch. **64a**, 309 (2009).
[44] S. H. Ma and J. P. Fang, Z. Naturforsch. **64a**, 37 (2009).
[45] J. B. Li, C. L. Zheng, and S. H. Ma, Z. Naturforsch. **63a**, 641 (2008).
[46] J. Lei, S. H. Ma, and J. P. Fang, Acta Phys. Sin. **60**, 050302 (2011).
[47] Z. Yang, S. H. Ma, and J. P. Fang, Chin. Phys. B **20**, 040301 (2011).